Chapter 8-Data Encoding (Digital to Digital Conversion)

Introduction

•*We must transform data into signals to send them from one place to another.*

• *Data stored in a computer are in the form 0s and 1s. To be carried from one place to another (inside or outside the computer), data are usually converted to digital signals. This is called digital-to-digital conversion or encoding digital data into a digital signal.*

•*Sometimes, we need to convert an analog signal (such as voice in a telephone conversation) into a digital signal for several reasons, such as to decrease the effect of noise. This is called analog-to-digital conversion or digitizing an analog signal.*

Introduction

•*At other times, we want to send a digital signal coming out of a computer through a medium designed for an analog signal. For example, to send data from one place to another using the public telephone line, the digital signal produced by the computer should be converted to an analog signal. This is called digital-to-analog conversion or modulating a digital signal.*

•*Often an analog signal is sent over long distances using analog media. For example, voice or music from a radio station, which is naturally an analog signal, is transmitted through the air. However, the frequency of the voice or music is not appropriate for this kind of transmission; the signal should be carried by a higher-frequency signal. This is called analog-to-analog conversion or modulating an analog signal.*

Introduction

- *When binary data is sent through a link, it is represented by a physical quantity in the transport medium.*
- *In electrical links, that's usually a voltage or current; optical systems use the intensity of light; and wireless radio links often use the phase and frequency of a signal carrier.*
- *Line coding determines how the binary data is represented on the link.*
- *Converting a string of 1's and 0's (digital data) into a sequence of signals that denote the 1's and 0's.*
- *For example a high voltage level (+V) could represent a "1" and a low voltage level (0 or -V) could represent a "0".*

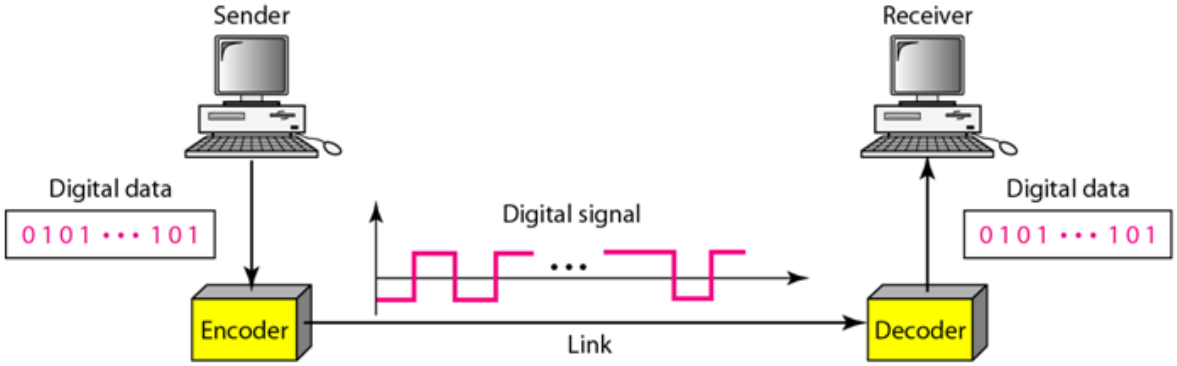

Mapping Data symbols onto Signal levels

A data symbol (or element) can consist of a number of data bits:

1 , 0 or

11, 10, 01, ……

A data symbol can be coded into a single signal element or multiple signal elements

$1 \rightarrow +V,\ 0 \rightarrow -V$

$1 \rightarrow +V$ *and* $-V,\ 0 \rightarrow -V$ *and* $+V$

The ratio 'r' is the number of data elements carried by a signal element

Relationship between data rate and signal rate

- *The data rate defines the number of bits sent per sec - bps. It is often referred to the bit rate.*

- *The signal rate is the number of signal elements sent in a second and is measured in bauds. It is also referred to as the modulation rate.*

- *Goal is to increase the data rate whilst reducing the baud rate*

Relationship between data rate and signal rate

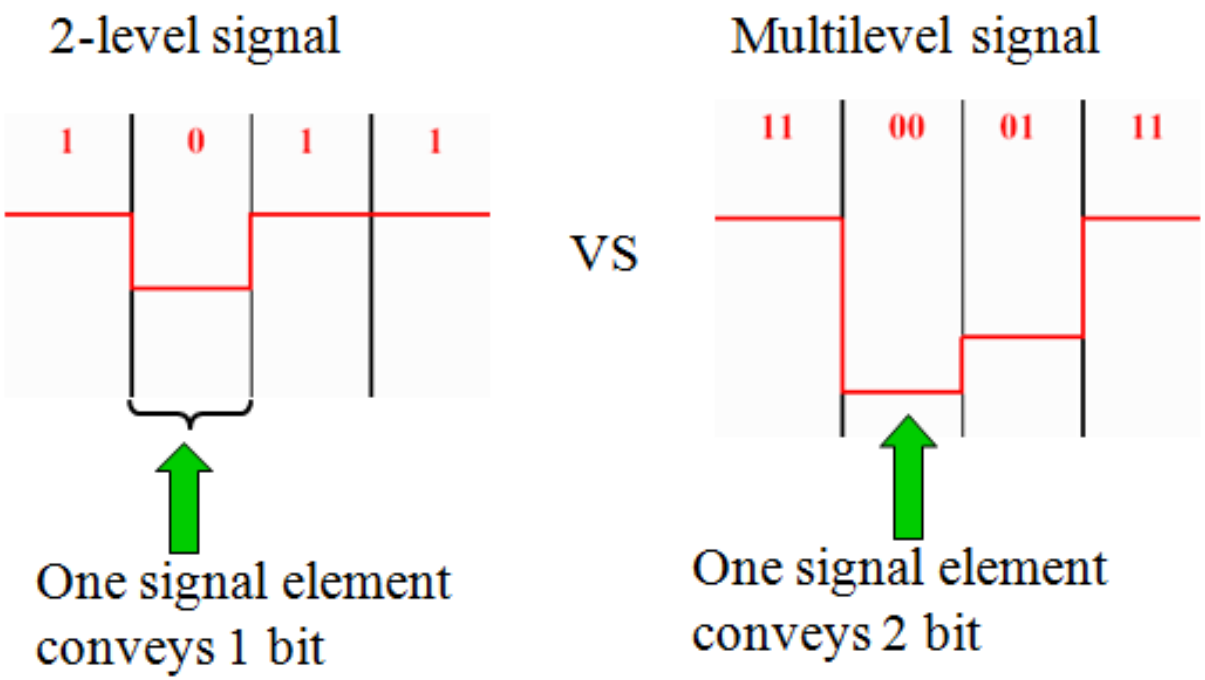

Signal element versus data element

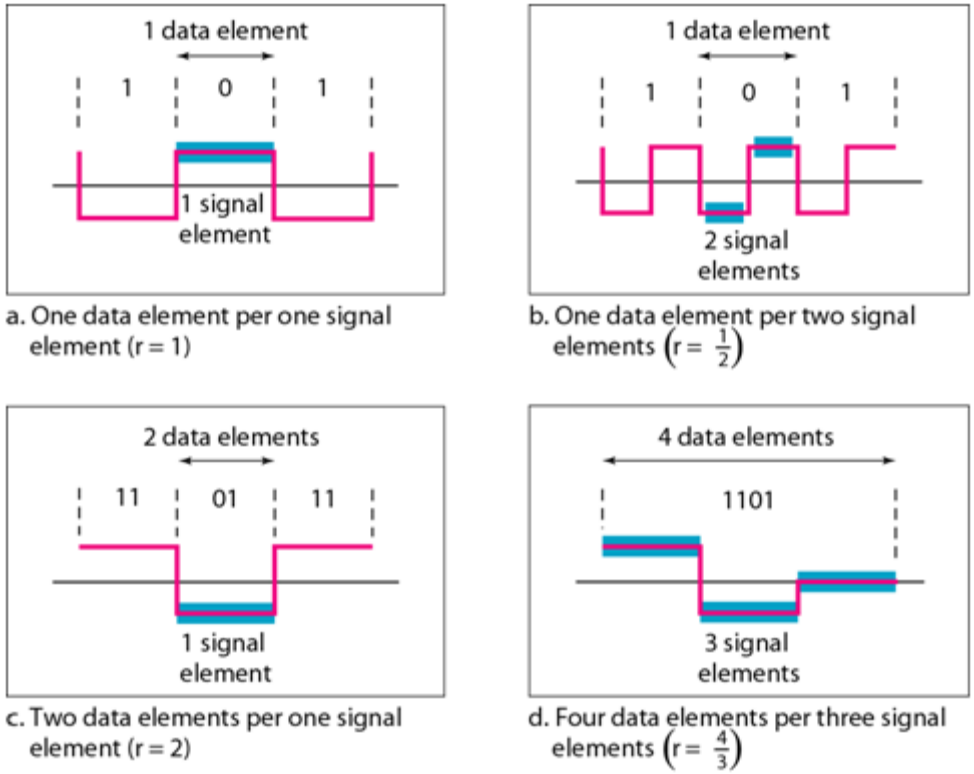

In part (a) of the figure, one data element is carried by one signal element (r = 1). In part (b) of the figure, we need two signal elements (two transitions) to carry each data element ( ). In part (c) of the figure, a signal carries two data elements. (r=2). Finally, in part (d), a group of 4 bits is carried by a group of three signal elements.

Example

A signal is carrying data in which one data element is encoded as one signal element (r = 1). If the bit rate is 100 kbps, what is the average value of the baud rate if c is between 0 and 1?

Solution:

We assume that the average value of c is 1/2 . The baud rate is then

$$S = c \times N \times \frac{1}{r} = \frac{1}{2} \times 100{,}000 \times \frac{1}{1} = 50{,}000 = 50 \text{ kbaud}$$

Line Encoding

Considerations for choosing a good signal element referred to as line encoding.

- *Baseline wandering - a receiver will evaluate the average power of the received signal (called the baseline) and use that to determine the value of the incoming data elements. If the incoming signal does not vary over a long period of time(when we have a long string of 0s or 1s), the baseline will drift and thus cause errors in detection of incoming data elements.*
- *A good line encoding scheme will prevent long runs of fixed amplitude.*

DC components

When the voltage level remains constant for long periods of time, there is an increase in the low frequencies of the signal (called DC component). Most channels are bandpass and may not support the low frequencies.

This will require the removal of the dc component of a transmitted signal.

Self synchronization

The clocks at the sender and the receiver must have the same bit interval.

If the receiver clock is faster or slower it will misinterpret the incoming bit stream.

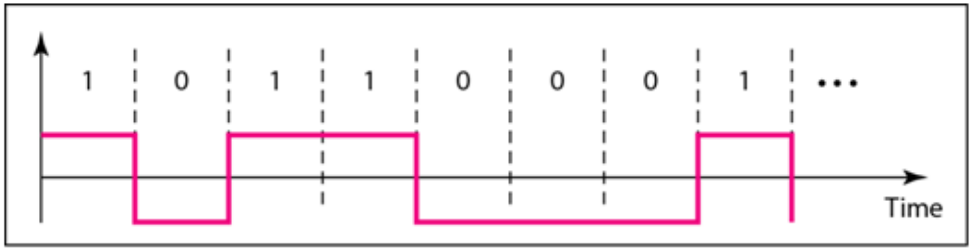

a. Sent

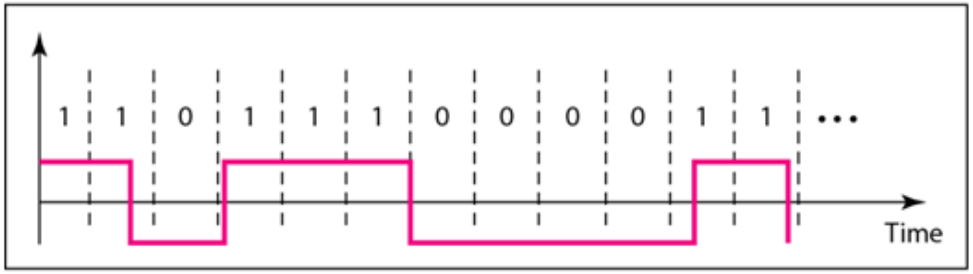

b. Received

Self synchronization

In a digital transmission, the receiver clock is 0.1 percent faster than the sender clock. How many extra bits per second does the receiver receive if the data rate is 1 kbps? How many if the data rate is 1 Mbps?

Solution

At 1 kbps, the receiver receives 1001 bps instead of 1000 bps.

1000 bits sent	1001 bits received	1 extra bps

At 1 Mbps, the receiver receives 1,001,000 bps instead of 1,000,000 bps.

1,000,000 bits sent	1,001,000 bits received	1000 extra bps

Error detection

Errors occur during transmission due to line impairments. Some codes are constructed such that when an error occurs it can be detected. For example: a particular signal transition is not part of the code. When it occurs, the receiver will know that a symbol error has occurred.

Noise and Interference

There are line encoding techniques that make the transmitted signal "immune" to noise and interference.
This means that the signal cannot be corrupted; it is stronger than error detection.

Line Coding Scheme

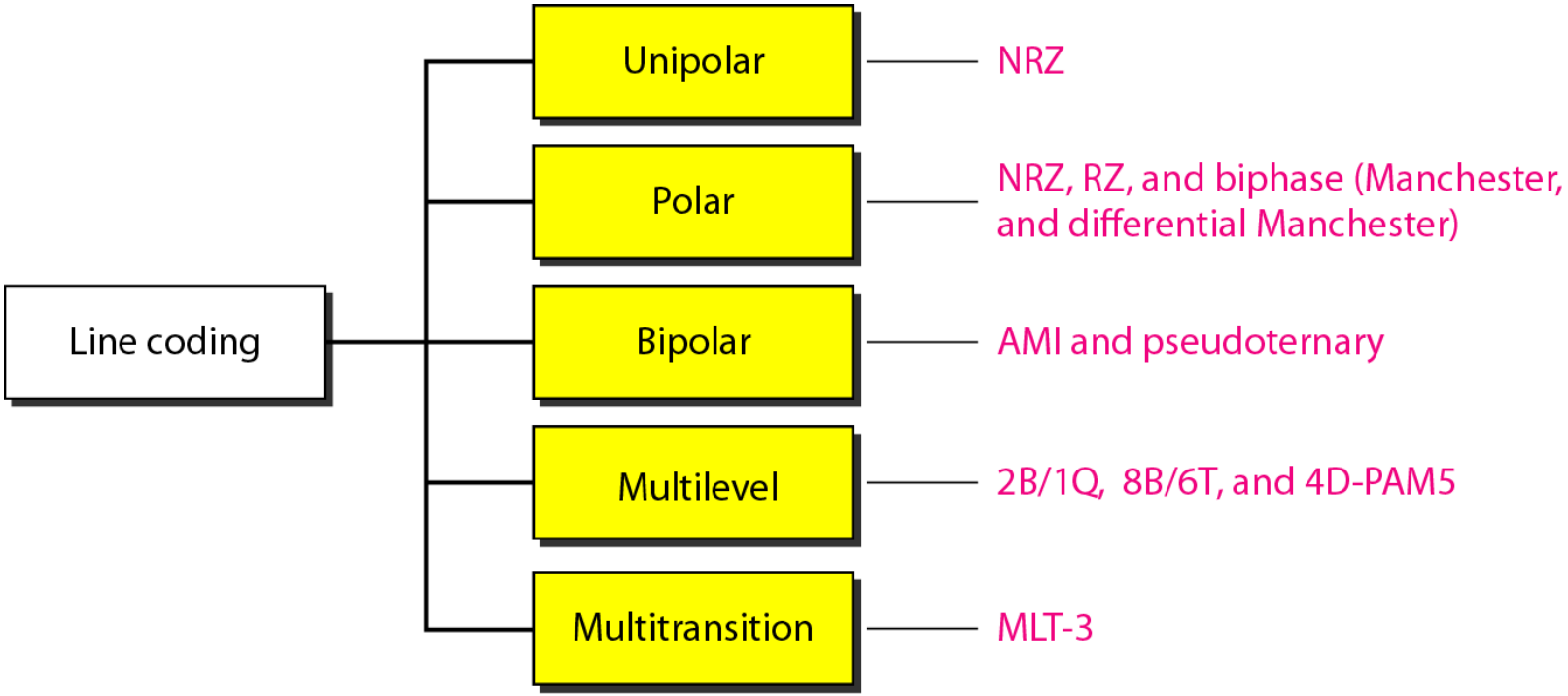

Unipolar-NRZ

- *All signal levels are on one side of the time axis - either above or below*
- *NRZ - Non Return to Zero scheme is an example of this code. The signal level does not return to zero during a symbol transmission.*

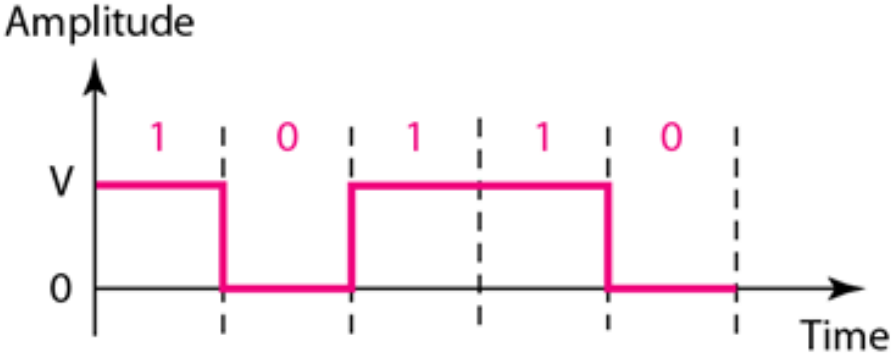

- *Scheme is prone to baseline wandering and DC components. It has no synchronization or any error detection. It is simple but costly in power consumption.*

Class Work

- *Encode the following sequence using Unipolar Encoding.*

10110110

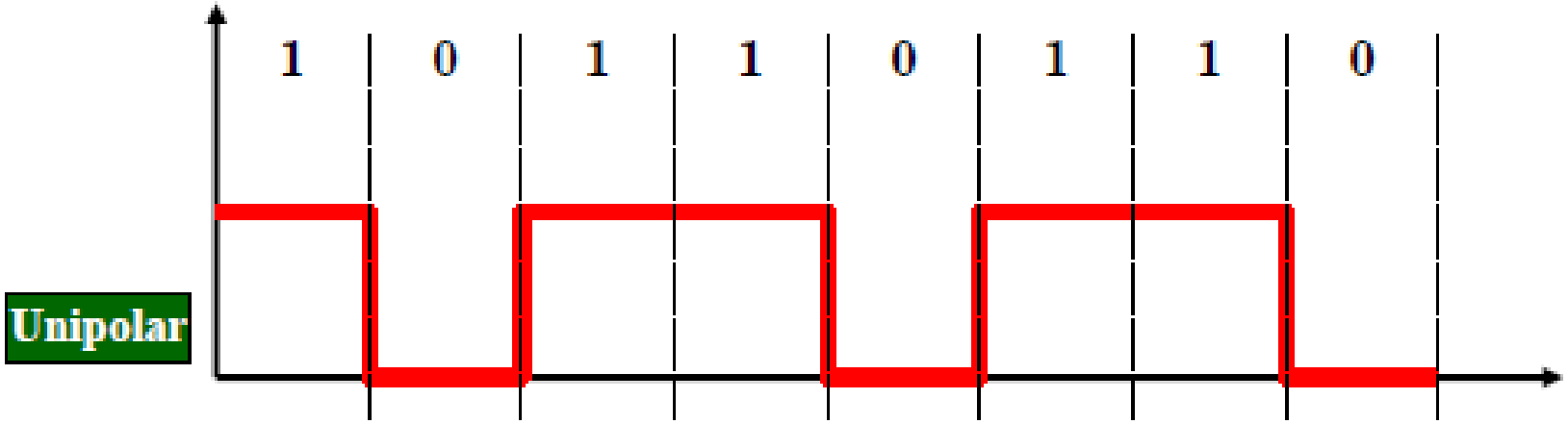

Polar-NRZ

The voltages are on both sides of the time axis.

Polar NRZ scheme can be implemented with two voltages. For example, the voltage level for 0 can be positive and the voltage level for I can be negative.

There are two versions:

- *NRZ - Level (NRZ-L) - positive voltage for one symbol and negative for the other*
- *NRZ - Inversion (NRZ-I) - the change or lack of change in polarity determines the value of a symbol. E.g. a "1" symbol inverts the polarity a "0" does not.*

Polar-NRZ

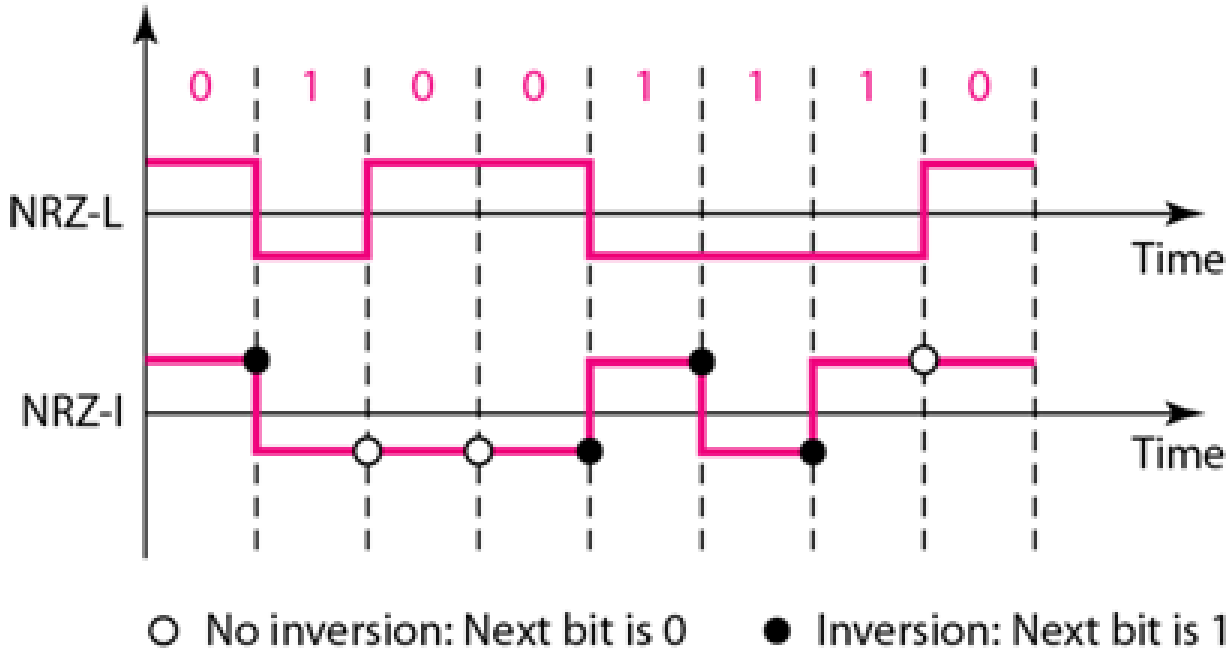

NRZ-L and NRZ-I both have a DC component problem and baseline wandering, it is worse for NRZ-L. Both have no self synchronization and no error detection. Both are relatively simple to implement.

Exercise

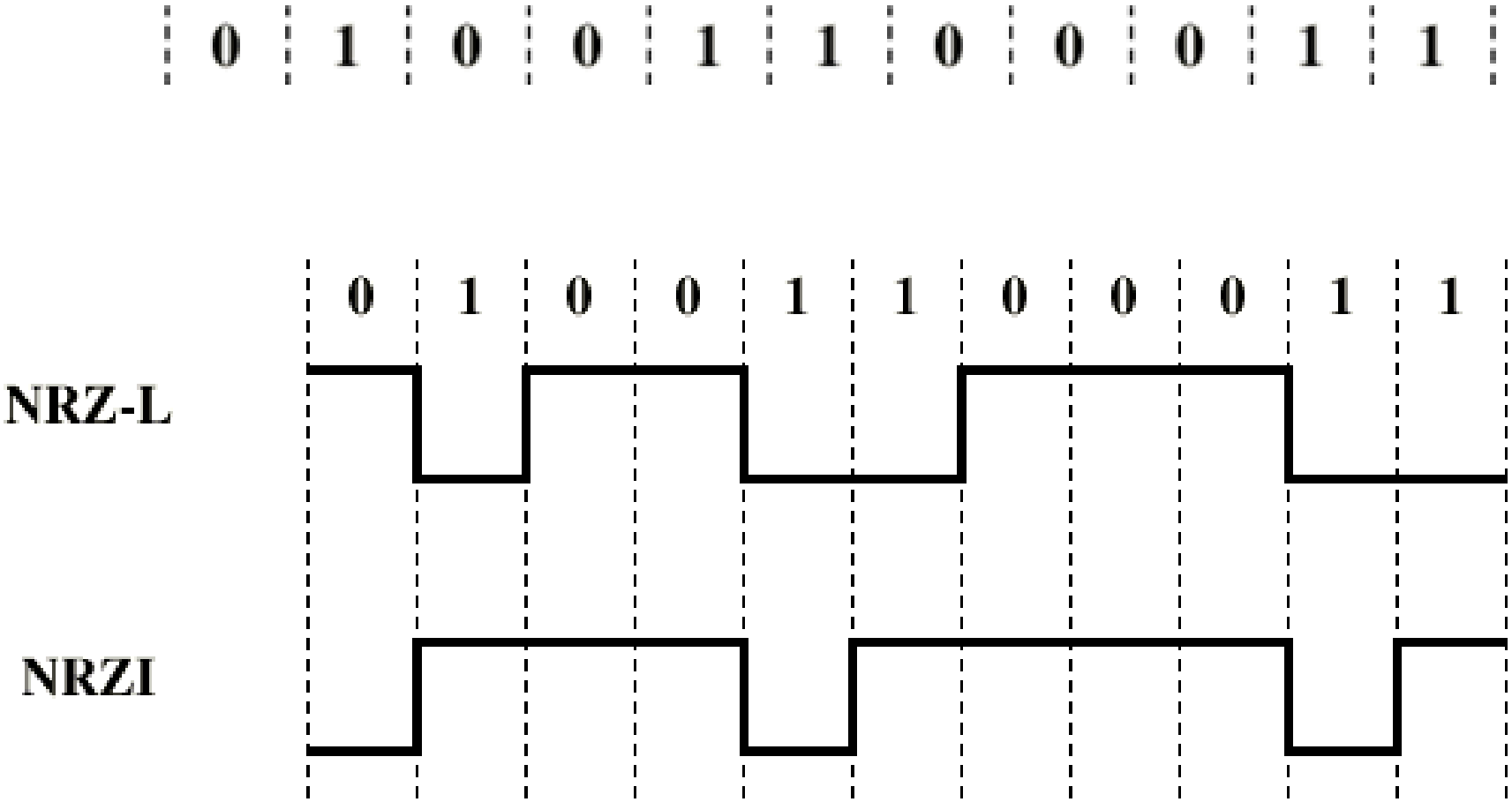

Class Work

- *Encode the following sequence using NRZ-L and NRZ-I Encoding.* *10110110*

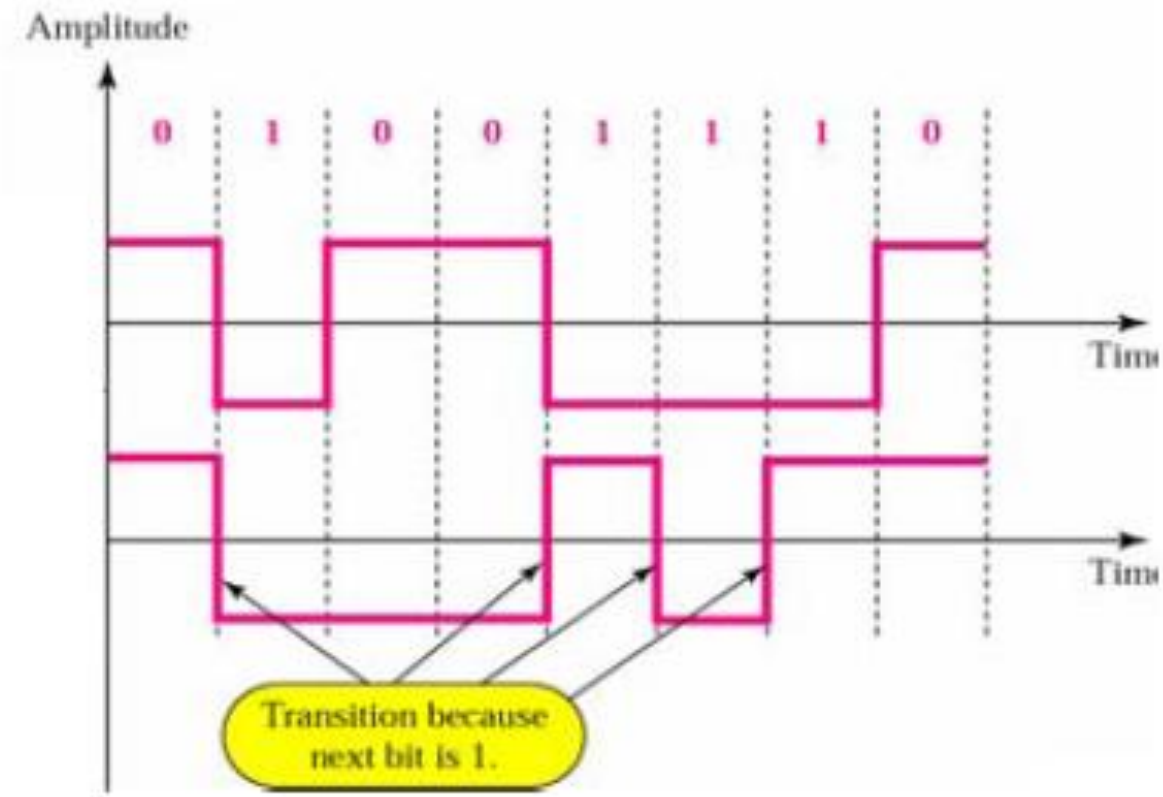

Polar-RZ

The Return to Zero (RZ) scheme uses three voltage values. +, 0, -.
Each symbol has a transition in the middle. Either from high to zero or from low to zero.

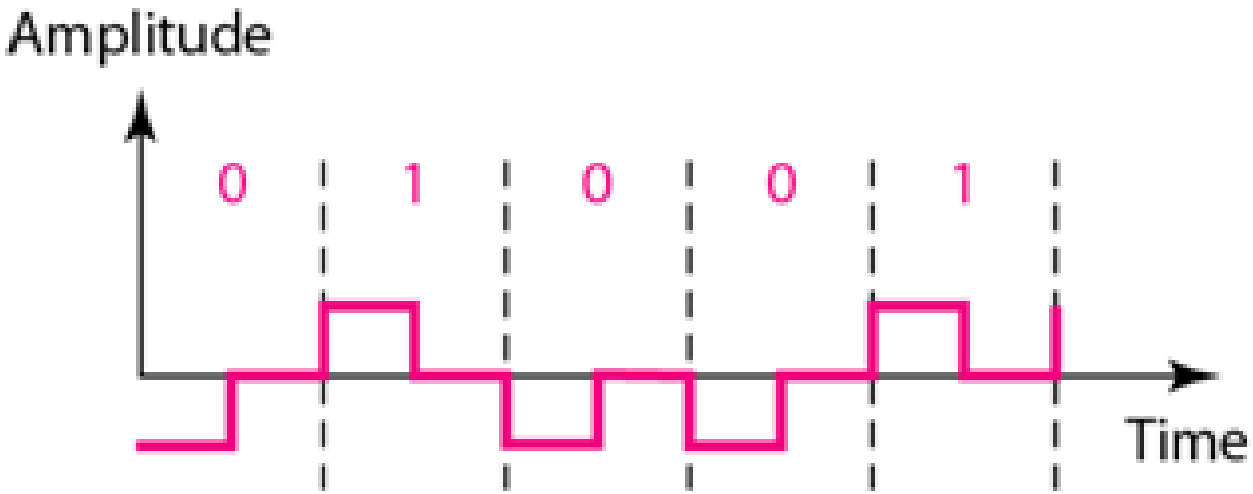

Polar-RZ

- *This scheme has more signal transitions (two per symbol) and therefore requires a wider bandwidth.*
- *No DC components or baseline wandering.*
- *Self synchronization - transition indicates symbol value.*
- *More complex as it uses three voltage level. It has no error detection capability.*

Manchester coding

- *Manchester uses a polarity inversion in the middle of each bit period*
  - *Low to high represents one*
  - *High to low represents zero*
- *Every symbol has a level transition in the middle: from high to low or low to high. Uses only two voltage levels.*

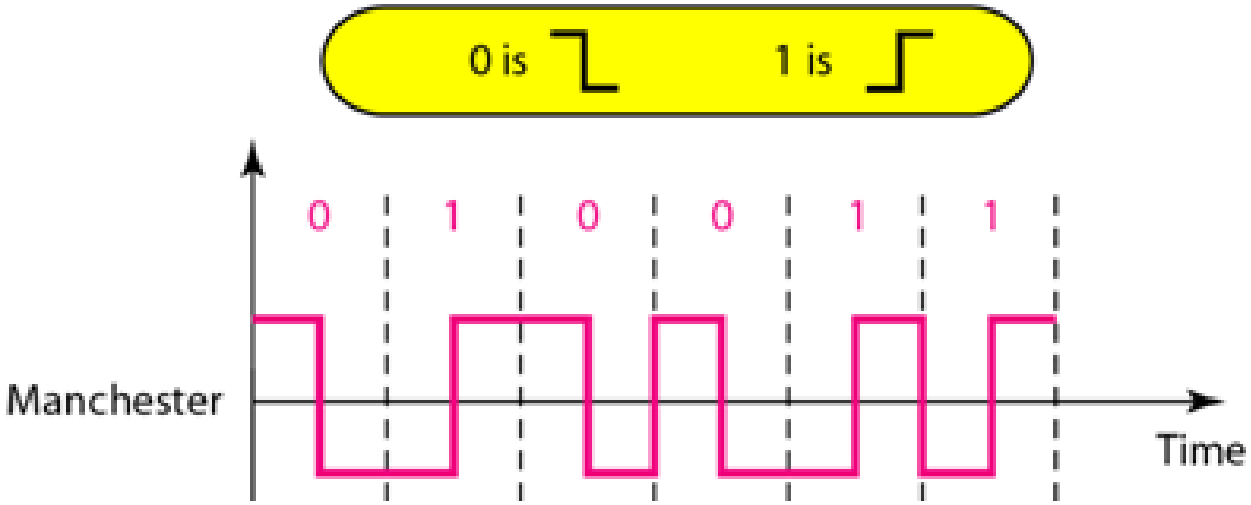

Differential Manchester coding

•*Polarity inversion in the* ***middle*** *of each bit period is used for* ***synchronization****.*

•*Only Transition at start of a bit period represents zero.*

•*No transition at start of a bit period represents one.*

•*Diff. Manchester requires two signal changes to represent "0" and one signal change to represent "1"*

•*Every symbol has a level transition in the middle. But the level at the beginning of the symbol is determined by the symbol value. One symbol causes a level change the other does not.*

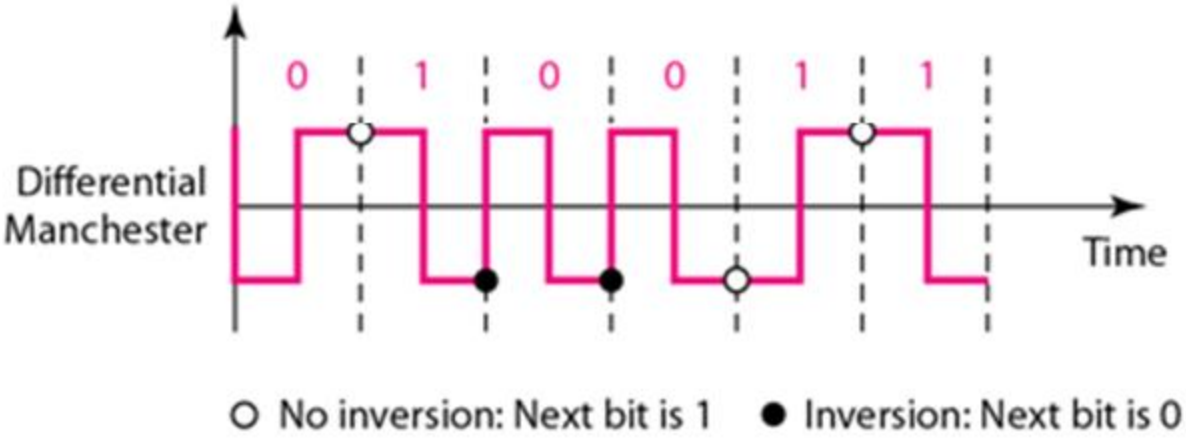

Differential Manchester coding

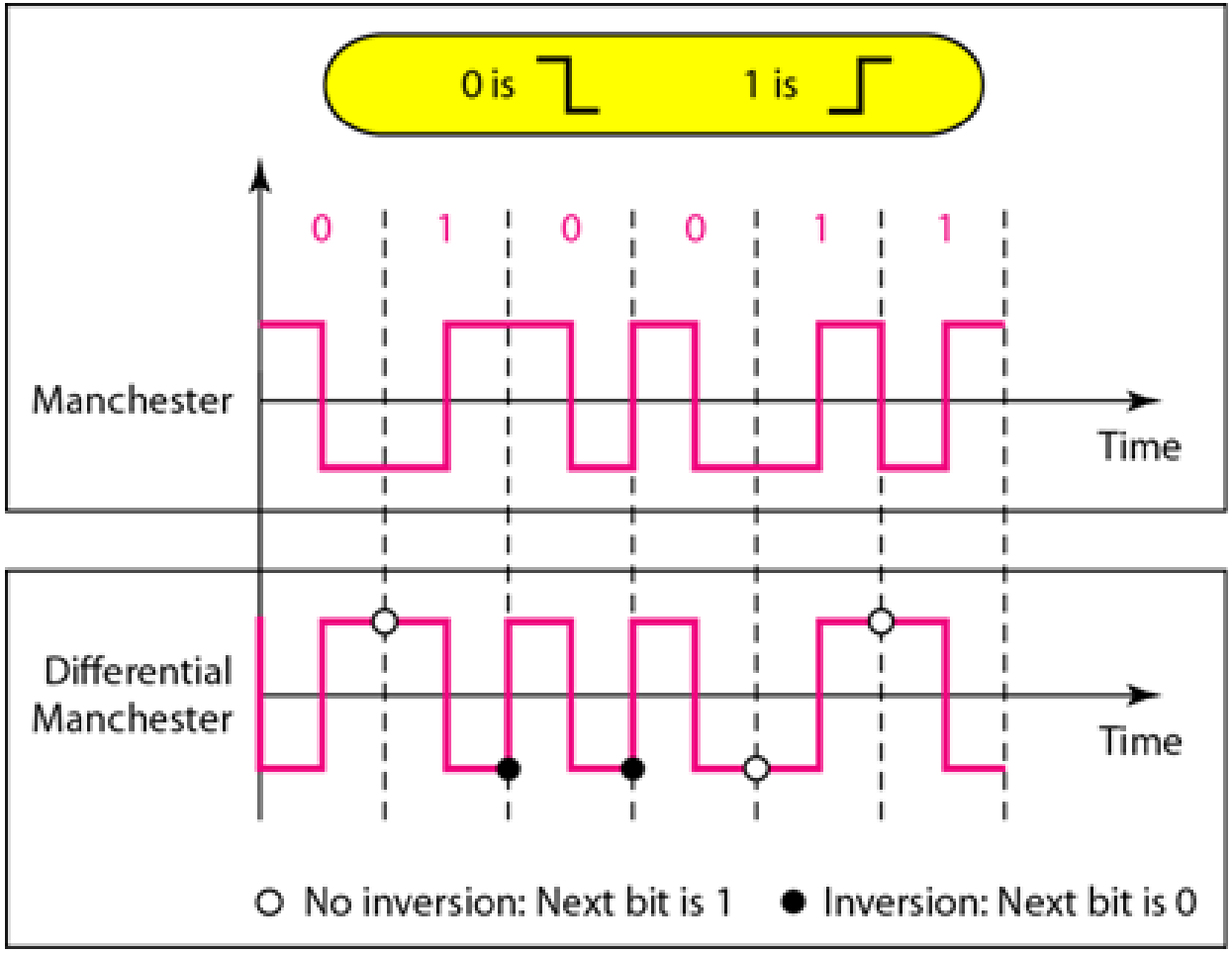

Differential Manchester coding

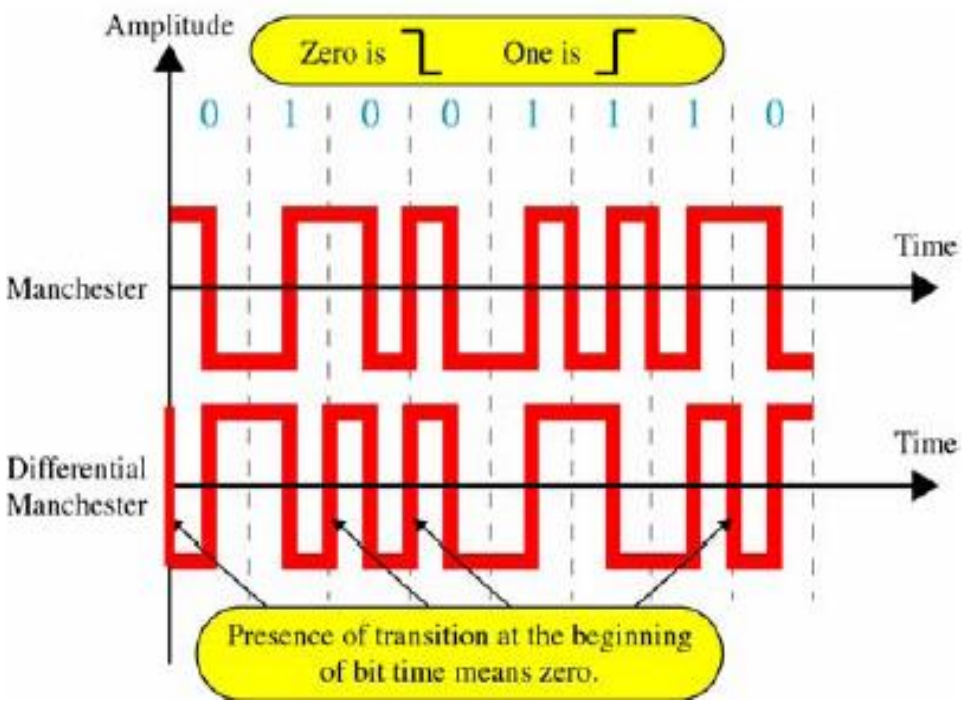

- *In Manchester and differential Manchester encoding, the transition at the middle of the bit is used for synchronization.*
- *There is no DC component and no baseline wandering.*
- *None of these codes has error detection.*

Exercise

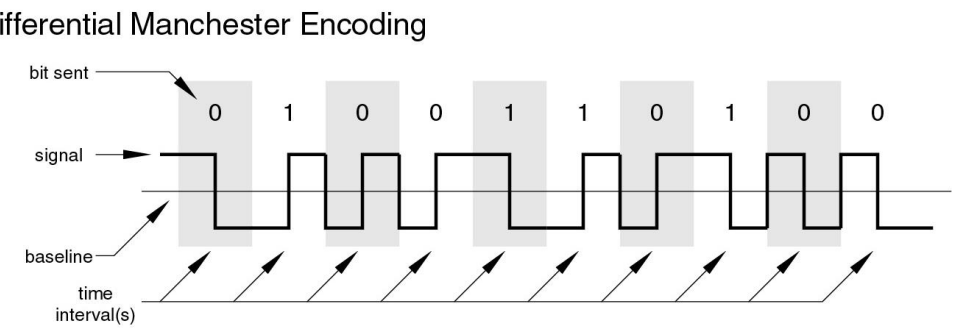
Differential Manchester Encoding
bit sent
0 1 0 0 1 1 0 1 0 0
signal
baseline
time
interval(s)

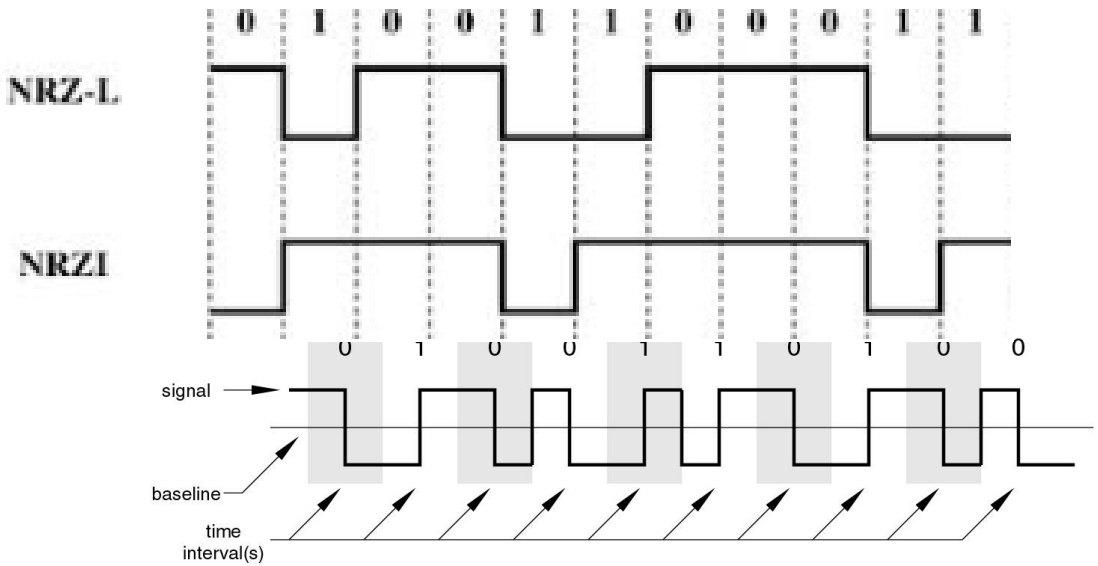
0 1 0 0 1 1 0 0 0 1 1
NRZ-L
NRZI
0 1 0 0 1 1 0 1 0 0
signal
baseline
time
interval(s)

Bipolar - AMI

•*Code uses 3 voltage levels: - +, 0, -, to represent the symbols (note not transitions to zero as in RZ).*

•*Voltage level for one symbol is at "0" and the other alternates between + & -.*

•*Bipolar Alternate Mark Inversion (AMI) - the "0" symbol is represented by zero voltage and the "1" symbol alternates between +V and –V.*

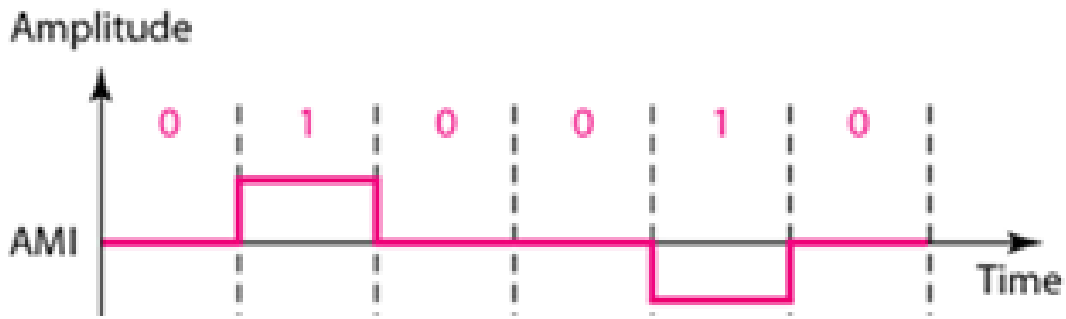

Pseudoternary

•*Pseudoternary is the reverse of AMI.*

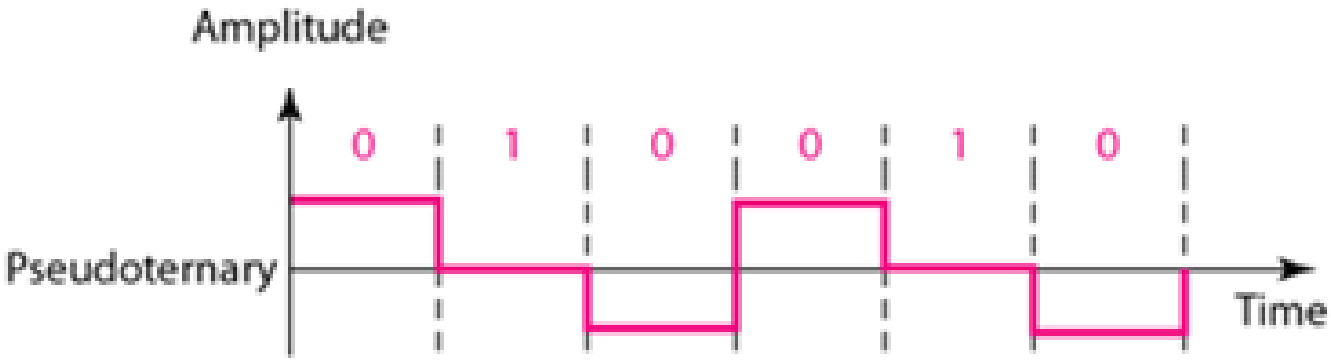

Bipolar – AMI and Pseudoternary

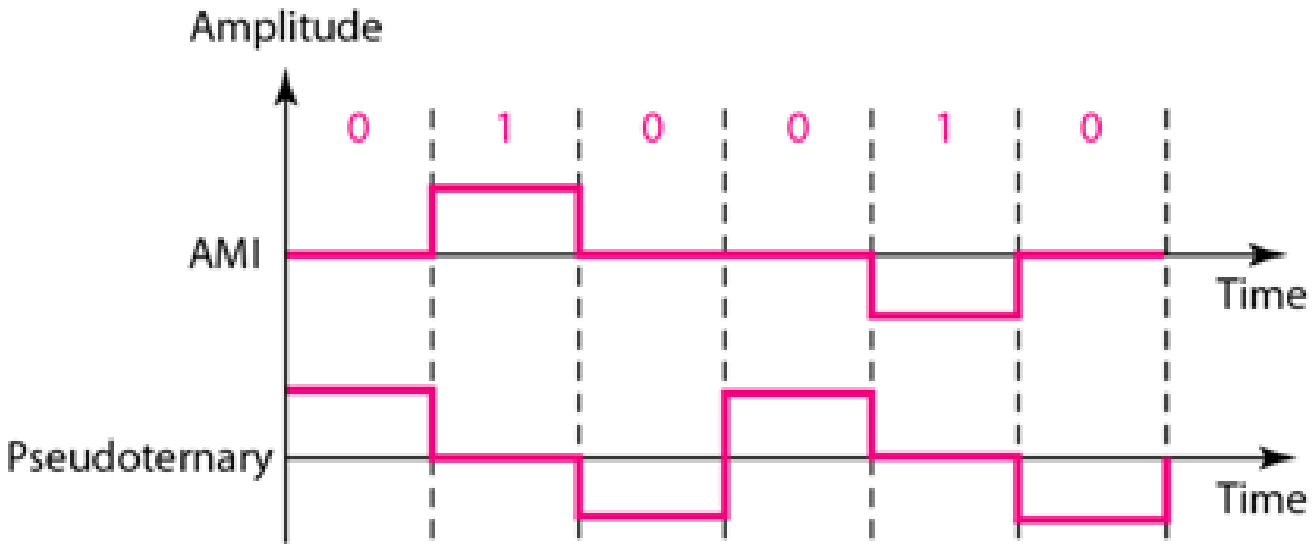

Bipolar 8-zero Substitution (B8ZS)

- *Bipolar AMI encoding, has a narrow bandwidth and does not create a DC component. However, a long sequence of 0s upsets the synchronization. If we can find a way to avoid a long sequence of 0s in the original stream, we can use bipolar AMI for long distances.*
- *Convention adopted in North America to provide synchronization of long strings of 0s.*
- *The difference between B8ZS and bipolar AMI occurs whenever eight or more consecutive 0s are encountered in the data stream.*
- *The solution provided by B8ZS is to force artificial signal changes, called violations, within the 0 string.*
- *Anytime eight 0s occur in succession, B8ZS introduces changes in the pattern based on the polarity of the previous 1.*

Bipolar 8-zero Substitution (B8ZS)

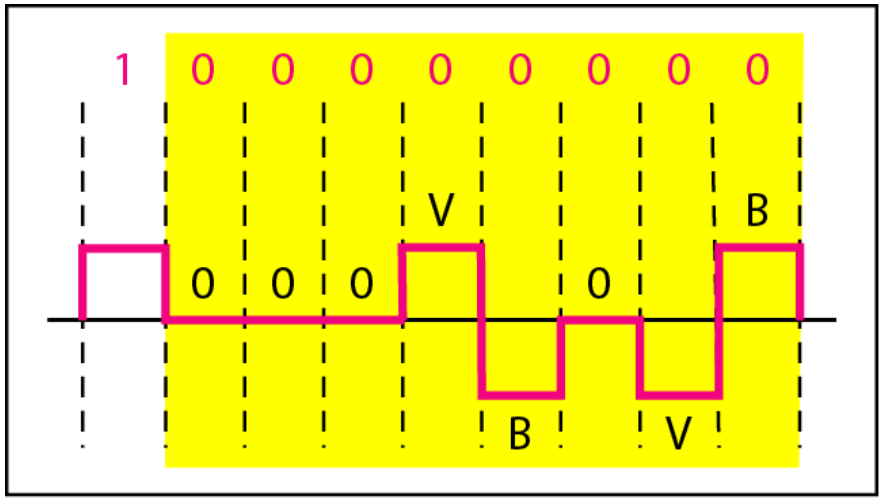

a. Previous level is positive.

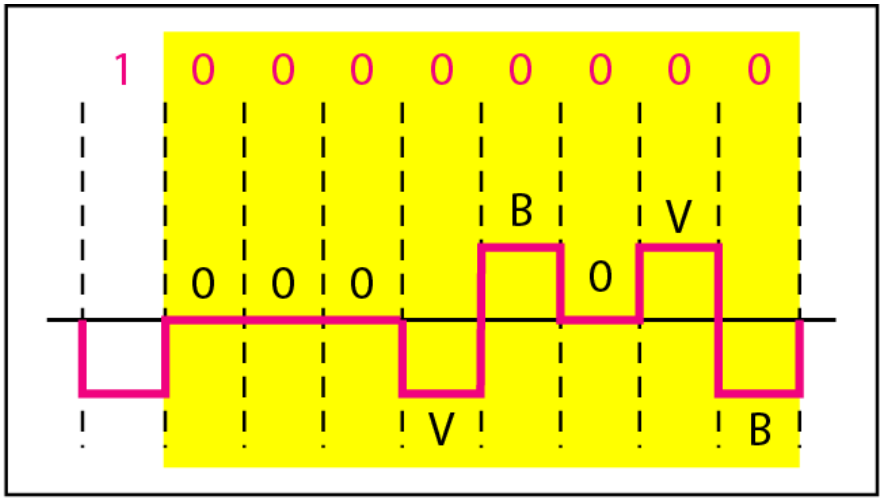

b. Previous level is negative.

Bipolar 8-zero Substitution (B8ZS)

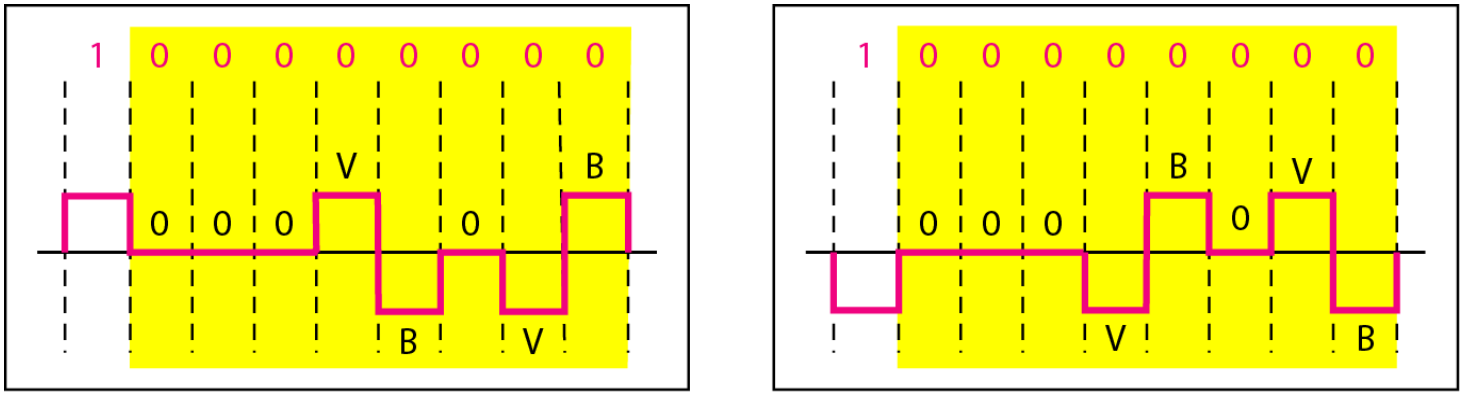

a. Previous level is positive.

b. Previous level is negative.

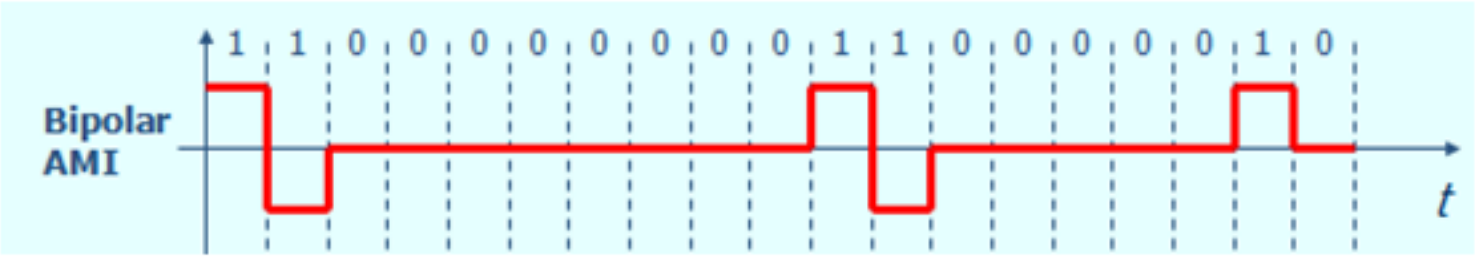

Bipolar 8-zero Substitution (B8ZS)

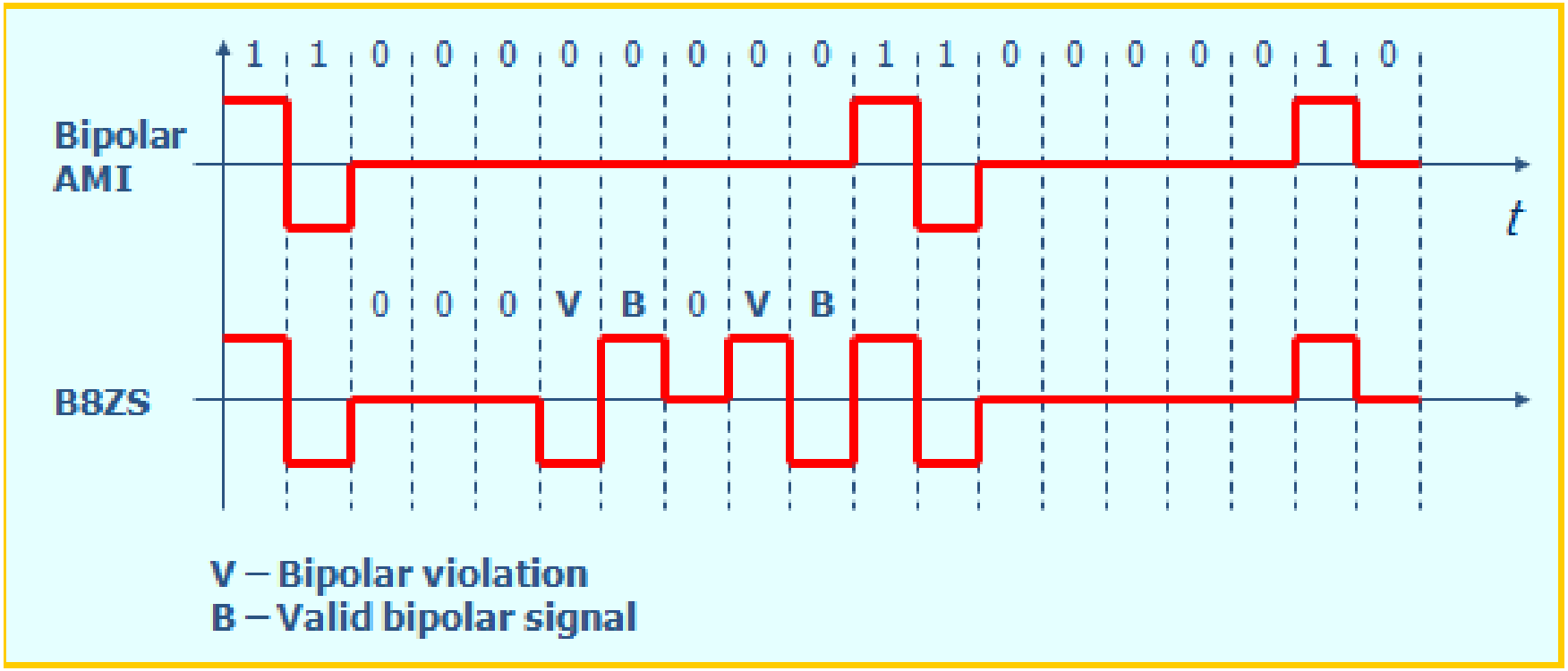

High-Density Bipolar 3 (HDB3)

- *The problem of synchronizing strings of consecutive 0s is solved differently in Europe and Japan.*
- *HDB3 substitutes four consecutive zeros with 000V or B00V depending on the number of nonzero pulses after the last substitution.*
- *If number of non zero pulses is even the substitution is B00V to make total no of non zero pulse even.*
- *If number of non zero pulses is odd the substitution is 000V to make total no of non zero pulses even.*

High-Density Bipolar 3 (HDB3)

Different situations in HDB3 scrambling technique

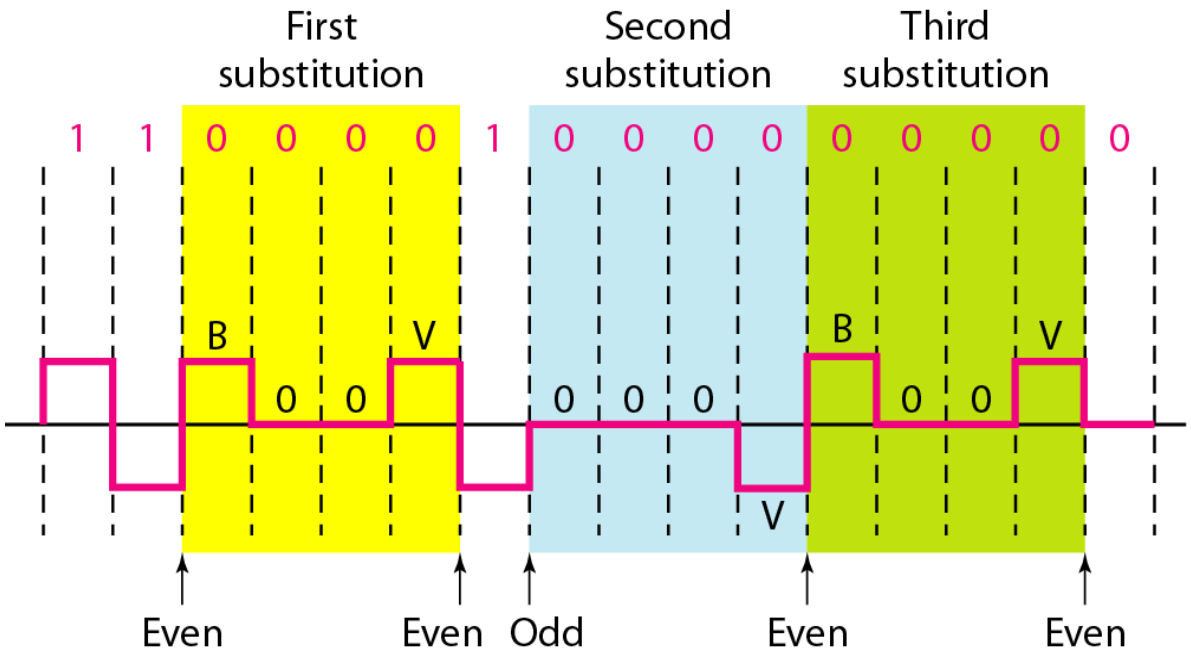

There are several points we need to mention here. First, before the first substitution, the number of nonzero pulses is even, so the first substitution is B00V. After this substitution, the polarity of the 1 bit is changed because the AMI scheme, after each substitution, must follow its own rule. After this bit, we need another substitution, which is 000V because we have only one nonzero pulse (odd) after the last substitution. The third substitution is B00V because there are no nonzero pulses after the second substitution (even).

High-Density Bipolar 3 (HDB3)

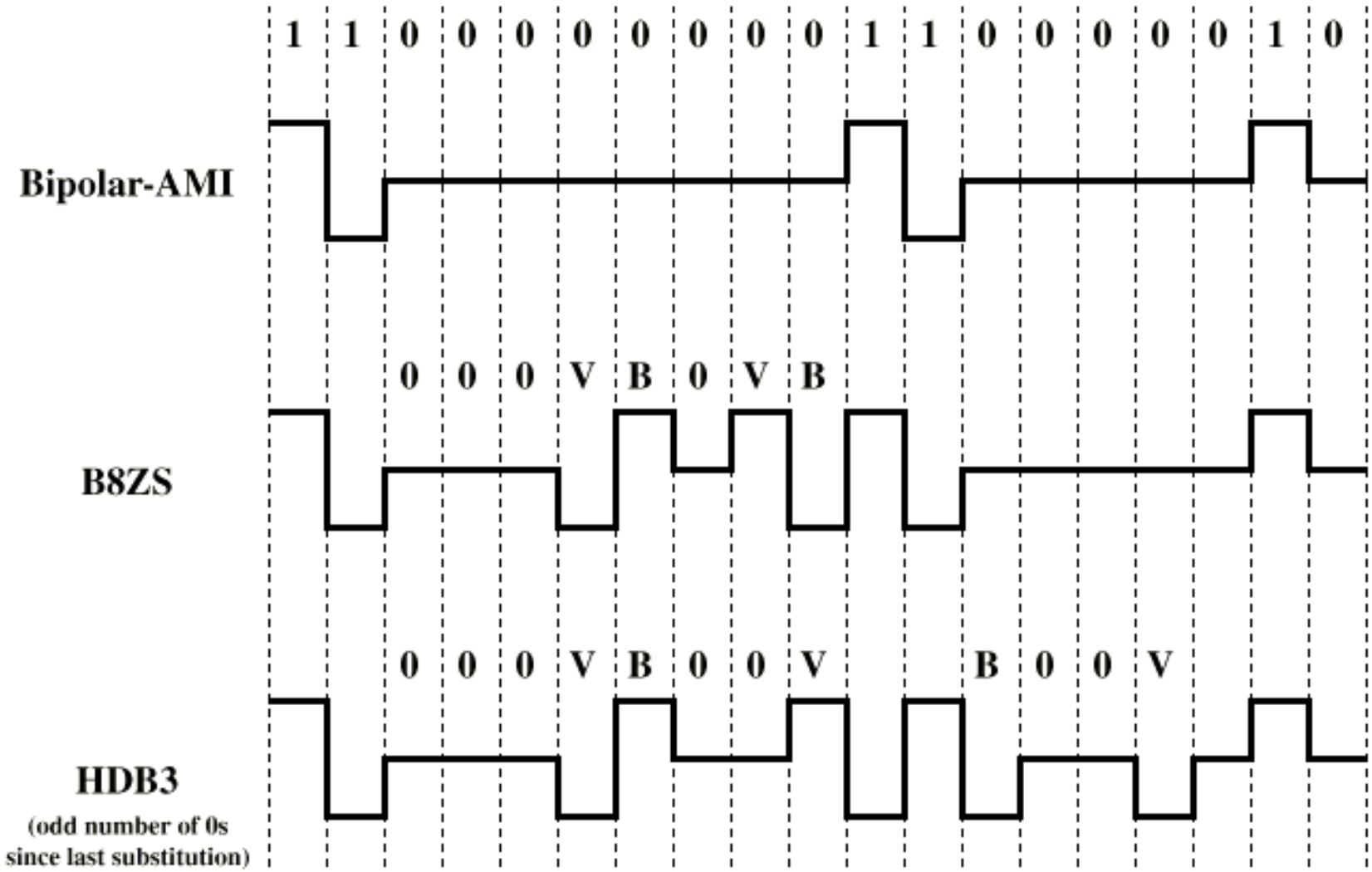

B = Valid bipolar signal
V = Bipolar violation

Multilevel Schemes

- *In these schemes we increase the number of data bits per symbol thereby increasing the bit rate.*
- *Since we are dealing with binary data we only have 2 types of data element a 1 or a 0.*
- *We can combine the 2 data elements into a pattern of "m" elements to create "2^m" symbols.*
- *If we have L signal levels, we can use "n" signal elements to create L^n signals elements.*

Multilevel Schemes

- *Now we have 2^m symbols and L^n signals.*
- *If $2^m > L^n$ then we cannot represent the data elements, we don't have enough signals.*
- *If $2^m = L^n$ then we have an exact mapping of one symbol on one signal.*
- *If $2^m < L^n$ then we have more signals than symbols and we can choose the signals that are more distinct to represent the symbols and therefore have better noise immunity and error detection as some signals are not valid.*

Multilevel Schemes

In mBnL schemes, a pattern of m data elements is encoded as a pattern of n signal elements in which $2^m \leq L^n$.

- *We use the notation mBnL, where m is the length of the binary pattern, B represents binary data, n represents the length of the signal pattern and L the number of levels.*
- *L = B binary, L = T for 3 ternary, L = Q for 4 quaternary.*

Multilevel: 2B1Q scheme

The first mBnL scheme is two binary, one quaternary (2B1Q), uses data pattern of size 2 and encodes the 2-bit patterns as one signal element belonging to a four-level signal. In this type of coding m=2, n=1 and L=4.

	Previous level: positive	Previous level: negative
Next bits	Next level	Next level
00	+1	-1
01	+3	-3
10	-1	+1
11	-3	+3

Transition table

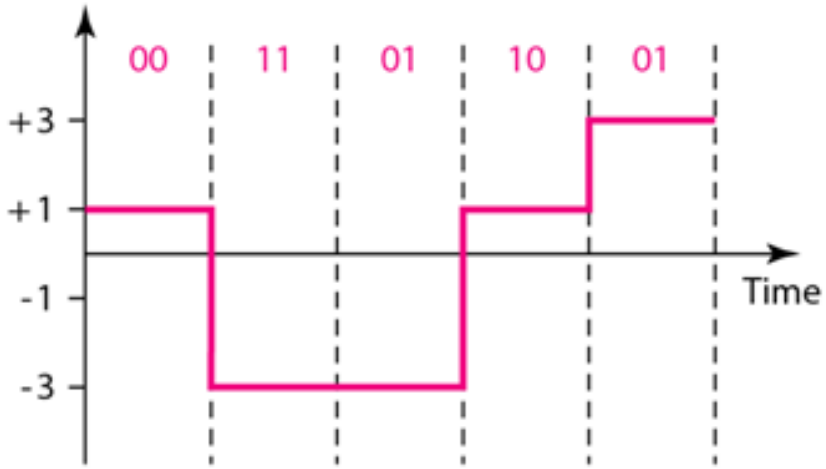

Assuming positive original level

Multilevel: 8B6T scheme

A very interesting scheme is eight binary, six ternary (8B6T). The idea is to encode a pattern of 8bits as a pattern of 6 signal elements, where the signal has three levels (ternary). In this scheme we can have 2^8=256 different data patterns and 3^6=478 different signal patterns.

Figure shows an example of three data patterns. The three possible signal levels are represented as -, 0 and +.

- *The first 8-bit pattern 00010001 is encoded as -0-0++*
- *The second 8-bit pattern 01010011 is encoded as -+-++0*
- *The third 8-bit pattern 01010000 is encoded as +--+0+.*

Multilevel: 8B6T scheme

Figure shows an example of three data patterns. The three possible signal levels are represented as -, 0 and +.
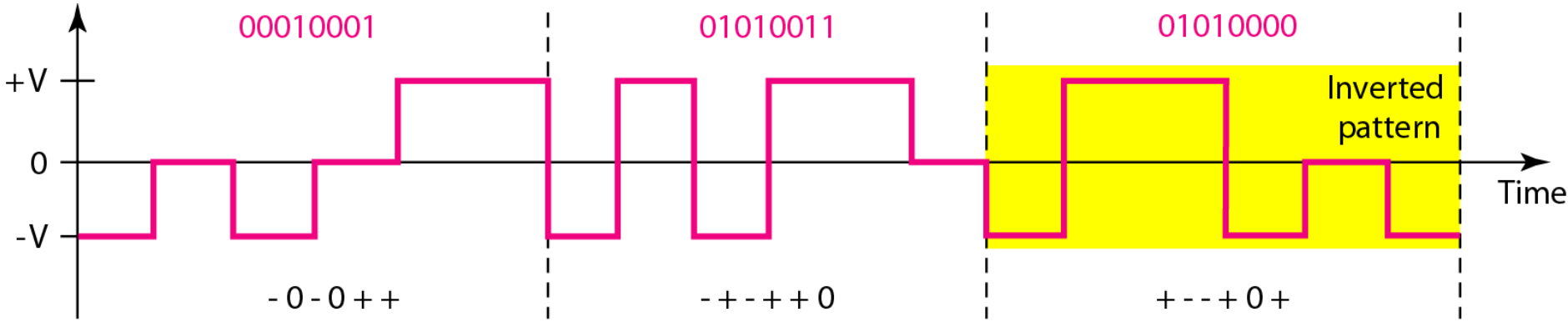
- *The first 8-bit pattern 00010001 is encoded as -0-0++*
- *The second 8-bit pattern 01010011 is encoded as -+-++0*
- *The third 8-bit pattern 01010000 is encoded as +--+0+.*